# GENERAL NOTES:

1. LIMIT DISTURBANCE TO ONLY THOSE AREAS NECESSARY FOR CONSTRUCTION.
2. STABILIZE ALL DISTURBED AREAS IN ACCORDANCE WITH SEEDING AND MULCHING SPECS.
3. USE PUMPED WATER BAG FOR BASEMENT EXCAVATION. REFER TO DETAIL #10 FOR BASIN DEWATERING
4. STOCKPILE HEIGHTS MUST NOT EXCEED 35 FEET. STOCKPILE SLOPES MUST BE 2:1 OR FLATTER.
5. ALL PUMPING OF SEDIMENT LADEN WATER SHALL BE THROUGH A SEDIMENT CONTROL BMP. SUCH AS A PUMPED WATER FILTER BAG DISCHARGING OVER NON-DISTURBED AREAS.
5. USE EROSION CONTROL BLANKETS ON ALL DISTURBED SLOPES GREATER THAN 3:1.

## SEQUENCE OF CONSTRUCTION

1. ALL EARTH DISTURBANCE ACTIVITIES SHALL PROCEED IN ACCORDANCE WITH THE FOLLOWING SEQUENCE. EACH STAGE SHALL BE COMPLETED BEFORE ANY FOLLOWING STAGE IS INITIATED. CLEARING AND GRUBBING SHALL BE LIMITED TO ONLY THOSE AREAS DESCRIBED IN EACH STAGE.
2. UPON COMPLETION OF AN EARTH DISTURBANCE ACTIVITY OR ANY STAGE OR PHASE OF AN ACTIVITY, THE OPERATOR SHALL STABILIZE IMMEDIATELY THE DISTURBED AREAS TO PROTECT FROM ACCELERATED EROSION.
3. AN EROSION AND SEDIMENT CONTROL PLAN SHALL BE PREPARED, DEVELOPED, AND APPROVED BY THE APPROPRIATE AGENCY AND IMPLEMENTED FOR ALL SPOIL AND BORROW AREAS REGARDLESS OF THEIR LOCATION. IT IS THE CONTRACTOR'S RESPONSIBILITY TO PREPARE AND DEVELOP SUCH PLAN.
4. INSTALL ROCK CONSTRUCTION ENTRANCE. INSTALL FILTER FABRIC FENCE AS SHOWN. CONSTRUCT AND STABILIZE THE SEDIMENT BASINS, SEDIMENT TRAPS, AND LEVEL SPREADERS REFER TO SEQUENCE OF SEDIMENT BASIN AND TRAP CONSTRUCTION. REMOVE FILTER TRAPS AFTER THE ROADWAY AND SWALE NETWORK HAVE BEEN CONSTRUCTED AND ACHIEVED PERMANENT STABILIZATION. AFTER ROADWAY AND SWALE CONSTRUCTION AND PERMANENT STABILIZATION HAS OCCURRED CONVERT THE SEDIMENT BASIN TO A DETENTION BASIN AND SEDIMENT TRAP TO A SWALE.
5. STRIP TOPSOIL AREAS OF CONSTRUCTION. DO NOT REMOVE TOPSOIL UNTIL ALL EROSION AND SEDIMENTATION MEASURES HAVE BEEN CONSTRUCTED AS SPECIFIED. STOCKPILE AS SHOWN. UPON COMPLETION OF TOPSOIL STOCKPILE, TEMPORARY SEED AND MULCH STOCKPILE.
6. INSTALL AND STABILIZE ROAD NETWORK. REFER TO ROADWAY SEQUENCE.
7. PERFORM BULK GRADING AS INDICATED. IF OFFSITE FILL WILL BE REQUIRED, THE SITE CONTRIBUTING THE FILL TO THIS SITE MUST HAVE AN ADEQUATE EROSION AND SEDIMENT CONTROL PLAN IN PLACE, APPROVED BY THE APPROPRIATE AGENCY. PERFORM ADDITIONAL PERMANENT SEEDING AND LANDSCAPING.
8. CONSTRUCT AND STABILIZE DWELLING FOR EACH LOT. REFER TO INDIVIDUAL LOT CONTROLS.
9. UPON COMPLETION OF EARTH MOVING ACTIVITIES, WHEN DISTURBED AREAS HAVE ACHIEVED PERMANANT VEGETATIVE (A MINIMUM 70% PERENNIAL VEGETATIVE COVER WITH A DENSITY CAPABLE OF RESISTING ACCELERATED EROSION AND SEDIMENTATION) AND UPON THE GOVERNING AGENCY APPROVAL, REMOVE ALL TEMPORARY CONTROLS. UNIFORMLY GRADE STOCKPILES AND BERMS NOT TO BE USED IN LATER PHASES. APPLY PERMANENT SEEDING AND LANDSCAPING.
10. AN AREA SHALL BE CONSIDERED TO HAVE ACHIEVED FINAL STABILIZATION WHEN IT HAS A MINIMUM UNIFORM 70 % PERENNIAL VEGETATIVE COVER OR OTHER PERMANENT NON-VEGETATIVE COVER WITH A DENSITY SUFFICIENT TO RESIST ACCELERATED EROSION AND SUBSURFACE CHARACTERISTICS SUFFICIENT TO RESIST SLIDING AND OTHER MOVEMENTS.

## ROADWAY SEQUENCE

1. STRIP TOPSOIL AREAS OF ROAD CONSTRUCTION ONLY. DO NOT REMOVE TOPSOIL UNTIL ALL EROSION AND SEDIMENTATION MEASURES HAVE BEEN CONSTRUCTED AS SPECIFIED. STOCKPILE AS SHOWN. UPON COMPLETION OF TOPSOIL REMOVAL, TEMPORARY SEED AND MULCH STOCKPILE. CONSTRUCT ROAD EMBANKMENTS AND EXCAVATIONS. IMMEDIATELY SEED AND MULCH SLOPES.
2. ROUGH GRADE ROADWAYS. UTILIZE EROSION CONTROL MATTING IN STEEP AREAS AS SHOWN.
3. INSTALL WATERLINE AND SANITARY SEWER SYSTEM FOLLOWING BMP SCHEDULE FOR SEWER AND UTILITY CONSTRUCTION.
4. INSTALL ALL SWALES WITH APPROPRIATE LINING FROM DOWNSTREAM TO UPSTREAM.
5. INSTALL STORM SEWER SYSTEMS. INCLUDE ADDITIONAL OUTLET CONTROLS. PROVIDE INLET PROTECTION. INSTALL REMAINING UTILITIES.

## B.M.P. SCHEDULE FOR SEWER/UTILITY CONSTRUCTION:

1. THE TOTAL LENGTH OF EXCAVATED TRENCH OPEN AT ONE TIME SHOULD NOT BE GREATER THAN THE TOTAL LENGTH OF PIPELINE/UTILITY LINE THAT CAN BE PLACED IN THE TRENCH AND BACKFILLED IN ONE WORKING DAY.
2. NO MORE THAN 50 LINEAL FEET OF THE OPEN TRENCH SHOULD EXIST WHEN PIPELINE/UTILITY LINE CEASES AT THE END OF THE WORKDAY.
3. SOIL SUPPLEMENTS, SEED AND MULCH SHOULD BE APPLIED WITHIN SEVEN DAYS OF AFTER THE PIPELINE/UTILITY LINE IS INSTALLED.

## SEQUENCE OF SEDIMENT BASIN AND SEDIMENT TRAP CONSTRUCTION

1. PERFORM BULK GRADING AS INDICATED ON PLAN.
2. INSTALL OUTLET PIPE WHERE APPLICABLE.
3. INSTALL OUTLET STRUCTURE. WHERE APPLICABLE. DO NOT CUT ORIFICES INTO OUTLET STRUCTURE UNTIL BASIN IS CONVERTED INTO DETENTION BASIN.
4. STABILIZE INTERIOR WITH EROSION CONTROL BLANKET, INSTALL BAFFLE WHERE APPLICABLE AND PROVIDE PERMANENT SEEDING.

## SEQUENCE OF SEDIMENT BASIN CONVERSION TO DETENTION BASIN

1. USING A PUMPED WATER FILTER BAG AND PROCEDURES FOR SUCH, DEWATER SEDIMENT STORAGE ZONE
2. REMOVE ACCUMULATED SEDIMENT IN ACCORDANCE WITH PROCEDURES UNDER RECYCLING/DISPOSAL.
3. CUT ORIFICES INTO OUTLET STRUCTURE.
4. REGRADE TO FINAL GRADES AS DEPICTED ON THE PLANS, INCLUDING SPILLWAY, BERM AND BASIN SIDE SLOPES.
5. STABILIZE INTERIOR WITH EROSION CONTROL BLANKET AND PROVIDE PERMANENT SEEDING.

## SEQUENCE OF SEDIMENT TRAP CONVERSION TO SWALE

1. USING A PUMPED WATER FILTER BAG AND PROCEDURES FOR SUCH, DEWATER SEDIMENT STORAGE ZONE
2. REMOVE ACCUMULATED SEDIMENT IN ACCORDANCE WITH PROCEDURES UNDER RECYCLING/DISPOSAL.
3. GRADE TRAP INTO SWALE SPECIFICATIONS DEPICTED ON PLAN AND DETAILS.

## TEMPORARY SEEDING :

LIMING RATE FOR TEMPORARY STABILIZATION SHOULD BE (1) TON OF PULVERIZED AGRICULTURAL LIMESTONE PER ACRE . FERTILIZER RATE FOR TEMPORARY STABILIZATION SHOULD BE 10-10-10 FERTILIZER AT 500 LBS. PER ACRE. TEMPORARY SEED (SPRING OR FALL) SHALL BE ANNUAL RYEGRASS, APPLIED AT A RATE OF 10 POUNDS PER ACRE.

## PERMANENT SEEDING :

* IF A SOIL TEST IS COMPLETED PRIOR TO SEEDING, AGRICULTURAL GRADE LIME MAY BE REDUCED (TONS/ACRE PENDING SOIL TEST).

LIMING RATE FOR PERMANENT STABILIZATION SHOULD BE (6) TONS OF PULVERIZED AGRICULTURAL LIMESTONE PER ACRE . FERTILIZER RATE FOR PERMANENT STABILIZATION SHOULD BE 10-10-20 FERTILIZER AT 1000 LBS. PER ACRE. PERMANENT SEED FOR SPRING SEEDING (UP TO JUNE 15) SHALL BE TALL FESCUE APPLIED AT A RATE OF 60 POUNDS PER ACRE. KENTUCKY BLUEGRASS APPIED AT A RATE OF 25 POUNDS PER ACRE, AND PERENNIAL RYEGRASS APPLIED AT A RATE OF 15 POUNDS PER ACRE. THE CONTRACTOR SHALL INSPECT SEEDED AREAS THREE (3) WEEKS AFTER APPLICATION. ANY AREA WITH LESS THAN A MINIMUM UNIFORM 70% PERENNIAL VEGETATIVE COVER WITH A DENSITY CAPABLE OF RESISTING ACCELERATED EROSION AND SEDIMENTATION SHALL BE RESEEDED.

## MULCHING :

MULCH MATERIAL SHALL BE HAY OR STRAW AS DEFINED IN SECTION 805 OF PENNDOT PUBLICATION 408 AND SHALL BE FREE FROM FOREIGN MATERIAL, COARSE STEMS, AND ANY SUBSTANCE TOXIC TO PLANT GROWTH, ALSO FREE FROM MATURE SEED BEARING STALKS OR ROOTS OF PROHIBITED OR NOXIOUS WEEDS, BOTH AS DEFINED BY LAW. PLACE MULCH IMMEDIATELY AFTER SEEDING IN A UNIFORM CONTINUOUS BLANKET AT A MINIMUM RATE OF 1,240 POUNDS PER 1,000 SQUARE YARDS. MULCHING SHALL BE USED FOR BOTH GERMINATING AND NON-GERMINATING TIMES OF YEAR.

## TEMPORARY & PERMANENT STABILIZATION GENERAL NOTES

IMMEDIATELY AFTER EACH DISTURBANCE ACTIVITIES CEASE, THE OPERATOR SHALL STABILIZE ANY AREAS DISTURBED BY THE ACTIVITIES. DURING NON-GERMINATING PERIODS, MULCH MUST BE APPLIED AT THE SPECIFIED RATES. DISTURBED AREAS WHICH ARE NOT AT FINISH GRADE AND WHICH WILL BE REDISTURBED WITHIN 1 YEAR MUST STABILIZED IN ACCORDANCE WITH THE TEMPORARY VEGETATIVE STABILIZATION SPECIFICATIONS. DISTURBED AREAS WHICH ARE AT FINISHED GRADE OR WHICH WILL NOT BE REDISTURBED WITHIN 1 YEAR MUST BE STABILIZED IN ACCORDANCE WITH THE PERMANENT VEGETATIVE STABILIZATION SPECIFICATIONS.

## GENERAL GOLF COURSE SEEDING SPECIFICATIONS :

GREENS - TO BE SAND-BASED AND CONSIST OF A-4 BENTGRASS CULTIVATED FROM SEED. GREENS TO BE SEEDED BY HAND WITH A DROP TYPE SEEDER.

TEES - TO BE SAND BASED AND SEEDED WITH LOW-MOW KENTUCKY BLUEGRASS. TEES TO BE SEEDED WITH A HYDROSEEDER.

FAIRWAYS - TO BE SCREENED TOPSOIL WITH LOW-MOW KENTUCKY BLUEGRASS AND TO BE SEEDED WITH A HYDROSEEDER.

ROUGH - TO BE SCREENED TOPSOIL WITH LOW MOW KENTUCKY BLUEGRASS AND TO BE SEEDED WITH A HYDROSEEDER.

AREAS THROUGHOUT THE GOLD COUSE THAT SUSCEPTIBLE TO WASHOUTS SUCH AS BUNKER BANKS, STEEP SLOPES AND AREAS AROUND DRAIN GRATES WILL HAVE KENTUCKY BLUEGRASS SOD TO PREVENT WASHOUTS THAT MAY OCCUR DURING SEED GERMINATION.

| | |
|---|---|
| Ad | Alden silt loam |
| AlC | Arnot-Lordstown complex, 0% to 15% slopes, very rocky |
| AlE | Arnot-Lordstown complex, 15% to 35% slopes, very rocky |
| AoC | Arnot-Oquaga complex, 0% to 15% slopes, very rocky |
| ArC | Arnot-Rock outcrop complex, 0% to 15% slopes |
| ArE | Arnot-Rock outcrop complex, 15% to 35% slopes |
| Ca | Carlisle muck |
| Ce | Carlisle, Palms, and Alden soils, ponded |
| ChA | Chenango gravelly loam, 0% to 3% slopes |
| Fu | Fluvaquents-Udifluvents complex, frequently flooded |
| LoB | Lordstown silt loam, 3% to 8% slopes, stony |
| LrC | Lordstown-Arnot complex, 8% to 15% slopes, very stony |
| Ne | Neversink loam |
| Nf | Neversink and Alden soils, very stony |
| OeB | Oquaga very channery silt loam, 3% to 8% slopes |
| OgC | Oquaga-Arnot complex, 8% to 15% slopes |
| OgD | Oquaga-Arnot complex, 15% to 25% slopes |
| Pa | Palms muck |
| Re | Red Hook sandy loam |
| ScA | Scriba loam, 0% to 3% slopes, stony |
| ScB | Scriba loam, 3% to 8% slopes, stony |
| SeB | Scriba and Morris loams, gently sloping, extremely stony |
| SrB | Swartswood gravelly loam, 3% to 8% slopes, stony |
| SrC | Swartswood gravelly loam, 8% to 15% slopes, stony |
| SrD | Swartswood gravelly loam, 15% to 25% slopes, stony |
| SwE | Swartswood and Lackawanna soils, steep, very stony |
| VaB | Valois gravelly sandy loam, 3% to 8% slopes |
| VaC | Valois gravelly sandy loam, 8% to 15% slopes |
| VaE | Valois gravelly sandy loam, 25% to 35% slopes |
| Wd | Wayland silt loam |
| WlC | Wellsboro and Wurtsboro soils, strongly sloping, extremely stony |
| WuA | Wurtsboro loam, 0% to 3% slopes, stony |
| WuB | Wurtsboro loam, 3% to 8% slopes, stony |
| WuC | Wurtsboro loam, 8% to 15% slopes, stony |

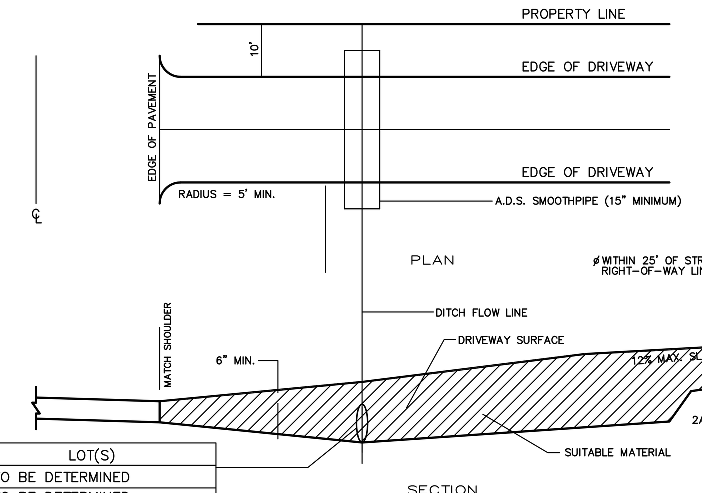


| PIPE SIZE | LOT(S) |
|---|---|
| 15" | TO BE DETERMINED |
| 18" | TO BE DETERMINED |
| 24" | TO BE DETERMINED |

## PROPOSED DRIVEWAY DETAIL (TYPICAL)
NTS

NO GRADE CHANGE OF GREATER THAN 6% SHALL BE ALLOWED ALONG THE DRIVE

### Riprap Aprons at Pipe Outlets with Flared End Sections

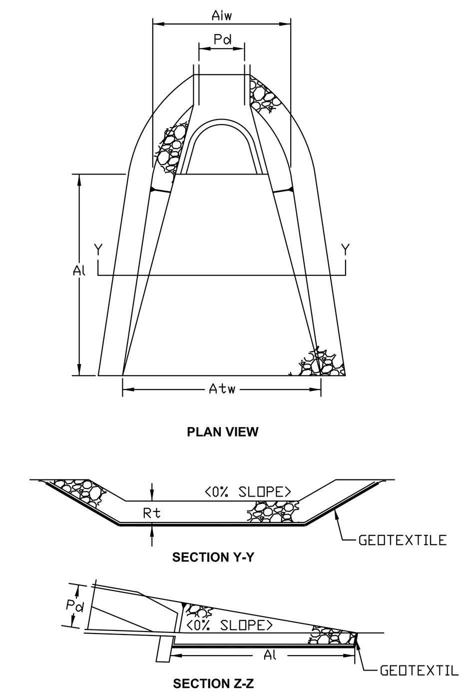


L=length where elevations of bottom of upstream check dam and top of downstream check dam are equal

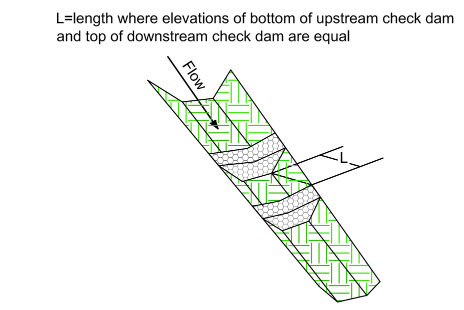


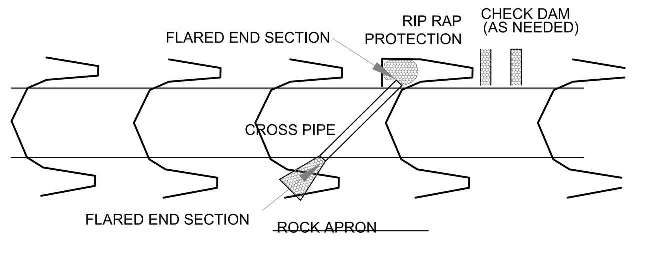


**CROSS-PIPE DETAIL**

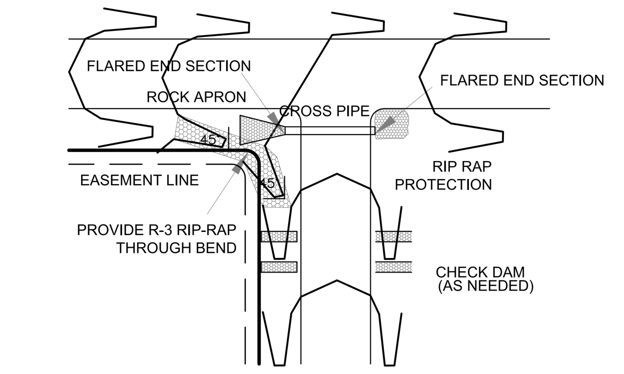


**SWALE GRADING DETAIL**

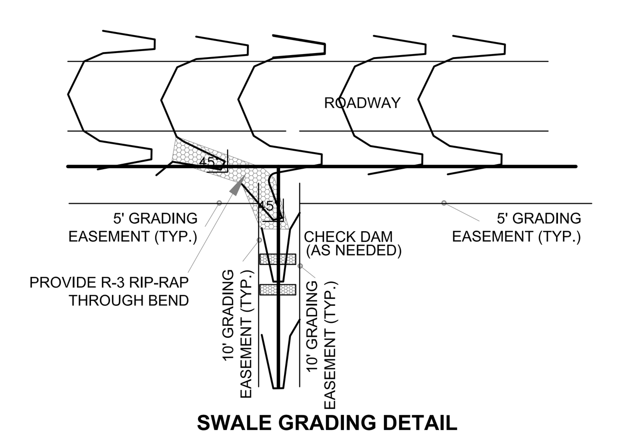


**SWALE GRADING DETAIL 'T'- INTERSECTION**

### Pumped Water Filter Bag

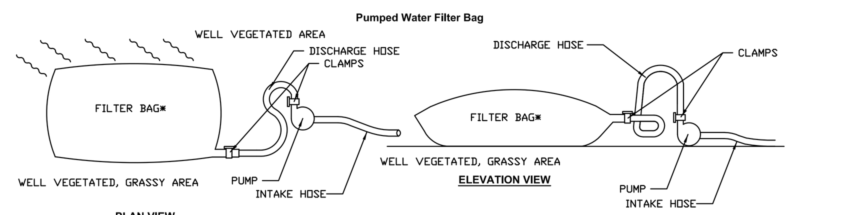


PUMPED WATER BAG

## PUMPED WATER FILTER BAG NOTES

1. FILTER BAGS SHALL BE MADE FROM NON-WOVEN GEOTEXTILE MATERIAL SEWN WITH HIGH STRENGTH, DOUBLE STITCHED 'J' TYPE SEAMS. THEY SHALL BE CAPABLE OF TRAPPING PARTICLE LARGER THAN 150 MICRONS.
2. A SUITABLE MEANS OF ACCESSING THE BAG WITH MACHINERY REQUIRED FOR DISPOSAL PURPOSES MUST BE PROVIDED. FILTER BAGS SHALL BE REPLACED WHEN THEY BECOME ½ FULL. SPARE BAGS SHALL BE KEPT AVAILABLE FOR REPLACEMENT OF THOSE THAT HAVE FAILED OR ARE FILLED.
3. BAGS SHALL BE LOCATED IN WELL VEGETATED (GRASSY) AREA, AND DISCHARGE ONTO STABLE, EROSION RESISTANT AREAS. WHERE THIS IS NOT POSSIBLE, A GEOTEXTILE FLOW PATH SHALL BE PROVIDED. BAGS SHALL NOT BE PLACED ON SLOPES GREATER THAN 5%.
4. THE PUMP DISCHARGE HOSE SHALL BE INSERTED INTO THE BAGS IN A MANNER SPECIFIED BY THE MANUFACTURER AND SECURELY CLAMPED.
5. THE PUMPING RATE SHALL BE NO GREATER THAN 750 GPM OR ½ THE MAXIMUM SPECIFIED BY THE MANUFACTURER, WHICHEVER IS LESS. PUMP INTAKES SHOULD BE FLOATING AND SCREENED.
6. FILTER BAGS SHALL BE INSPECTED DAILY. IF ANY PROBLEM IS DETECTED, PUMPING SHALL CEASE IMMEDIATELY AND NOT RESUME UNTIL THE PROBLEM IS CORRECTED.

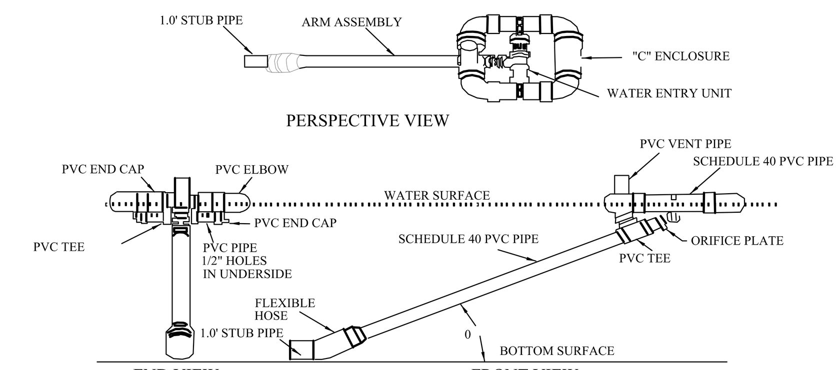


## SKIMMER DETAIL
NTS

O SHOULD BE 45 DEGREES OR LESS WHEN THE WATER SURFACE IS AT THE MAXIMUM POOL ELEVATION THE ELEVATION OF THE 2 CFS/ACRE DISCHARGE.

| PIPE | INV-IN | INV-OUT | MATERIAL | LENGTH | SLOPE |
|---|---|---|---|---|---|
| SWP-1 | 1483.0 | 1481.7 | HPDE | 86' | 1.5% |
| SWP-2 | 1490.5 | 1489.5 | HPDE | 50' | 2% |
| SWP-3 | 1498.0 | 1497.0 | HPDE | 50' | 2% |
| SWP-4 | 1485.0 | 1484.0 | HPDE | 50' | 2% |
| SWP-5 | 1474.8 | 1474.0 | HPDE | 50' | 1.5% |
| SWP-6 | 1519.5 | 1518.0 | HPDE | 50' | 2% |
| SWP-7 | 1498.0 | 1497.0 | HPDE | 50' | 2% |
| SWP-8 | 1498.5 | 1498.0 | HPDE | 50' | 1% |
| SWP-9 | 1471.0 | 1470.0 | HPDE | 50' | 2% |

## INSPECTION / MAINTENANCE :

THE PERSON AND/OR ENTITY RESPONSIBLE FOR THE ONGOING MAINTENANCE OF ALL EROSION AND SEDIMENT POLLUTION CONTROL FACILITIES THROUGHOUT THE PERIOD OF CONSTRUCTION AND UNTIL SUCH TIME THAT THE SITE IS DEEMED PERMANENTLY STABILIZED. THE ITEMS OF RESPONSIBILITY INCLUDE, BUT ARE NOT LIMITED TO THE FOLLOWING:

1. THE ROCK CONSTRUCTION ENTRANCE SHALL BE INSPECTED AT THE END OF EACH CONSTRUCTION DAY. THE ROCK PILE SHALL BE MAINTAINED AT A THICKNESS OF 8-INCHES. A STOCKPILE OF ROCK SHALL BE MAINTAINED ON SITE FOR THIS PURPOSE. ANY SEDIMENTS THAT HAVE BEEN DEPOSITED ON PUBLIC ROADS SHALL BE REMOVED IMMEDIATELY.
2. ALL FILTER FABRIC FENCING SHALL BE INSPECTED AFTER EACH STORM EVENT FOR WASHOUTS, OVERTOPPING, AND PHYSICAL DAMAGE. ANY DAMAGE SHALL BE REPAIRED IMMEDIATELY. ACCUMULATED SEDIMENTS SHALL BE REMOVED AS REQUIRED TO KEEP THE BARRIER FUNCTIONAL. IN ALL CASES, REMOVE DEPOSITS WHERE ACCUMULATIONS REACH ONE-HALF (1/2) OF THE ABOVE GROUND HEIGHT OF THE BARRIER.
3. SEDIMENT MUST BE REMOVED FROM ROCK FILTERS WHEN ACCUMULATIONS REACH 1/3 THE HEIGHT OF THE OUTLET. MATERIALS MUST BE WASHED COMPLETELY FREE OF ALL FOREIGN MATERIALS OR NEW ROCK USED TO REBUILD THE FILTER.
4. THE PROPER TIMING OF THE INSTALLATION AND REMOVAL OF ALL FACILITIES AS HEREIN SPECIFIED SHALL BE ASSURED. ALL USED MATERIALS SHALL BE REMOVED FROM THE SITE AND DISPOSED OF IN AN APPROVED SANITARY LANDFILL OR REUSED ELSEWHERE IF POSSIBLE.
5. ALL SEEDED AREAS SHALL BE INSPECTED THREE (3) WEEKS AFTER SEED APPLICATION TO ENSURE THAT AT LEAST SEVENTY PERCENT (70%) OF THE SEEDED AREAS ARE COVERED. IF LESS THAN SEVENTY PERCENT (70%) COVERAGE IS ACHIEVED, THEN RESEEDING SHALL BE INITIATED.
6. UNTIL THE SITE IS STABILIZED, ALL EROSION AND SEDIMENT BMPs MUST BE MAINTAINED PROPERLY. MAINTENANCE MUST INCLUDE INSPECTIONS OF ALL EROSION AND SEDIMENT BMPS AFTER EACH RUNOFF EVENT AND ON A WEEKLY BASIS. ALL PREVENTATIVE AND REMEDIAL MAINTENANCE WORK, INCLUDING CLEAN OUT, REPAIR, REPLACEMENT, REGARDING, RESEEDING, REMULCHING AND RENETTING MUST BE PERFORMED IMMEDIATELY. IF EROSION AND SEDIMENT CONTROL BMPs FAIL TO PERFORM AS EXPECTED, REPLACEMENT BMPs, OR MODIFICATIONS OF THOSE INSTALLED WILL BE REQUIRED.
7. WEEKLY INSPECTIONS IN ADDITION TO INSPECTIONS AFTER EACH RUNOFF EVENT SHOULD BE MADE TO ALL EROSION AND SEDIMENTATION CONTROLS. REPAIRS SHOULD BE COMPLETED WITHIN A 24 HOUR PERIOD.
8. RETAINED SEDIMENT SHALL BE UTILIZED FOR LANDSCAPING WHERE POSSIBLE. REFER TO THE 'RECYCLING / DISPOSAL NOTE' FOR ALTERNATIVES.

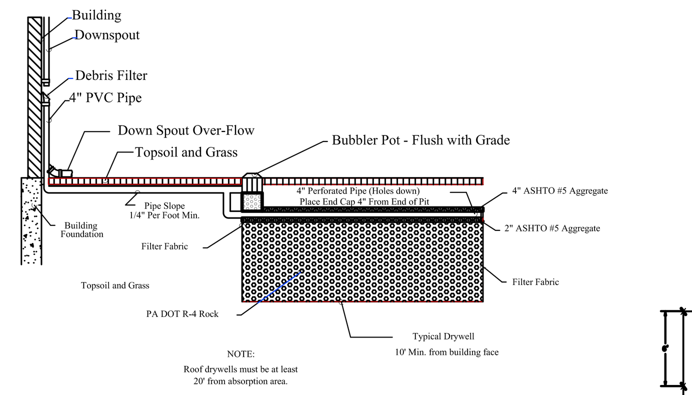


## DRY WELL CONSTRUCTION SPECIFICATIONS

DRYWELLS SHALL BE INSTALLED ON EACH LOT IN CONJUNCTION WITH HOME CONSTRUCTION. INSTALLATION AND MAINTENANCE SHALL BE THE RESPONSIBILITY OF THE INDIVIDUAL LOT OWNERS

1. SCREEN TOP DOWN SPOUTS ON BUILDING TO PREVENT LEAVES FROM ENTERING DRY WELL.
2. DRY WELL SHOULD BE LOCATED A MINIMUM OF 100 FEET FROM ANY WATER WELL AND 10 FEET DOWN GRADIENT FROM ANY BUILDING FOUNDATION. CARE MUST BE TAKEN TO AVOID PLACING THE DRY WELL EITHER DIRECTLY UP GRADIENT OR DOWN GRADIENT OF ON-SITE ELEVATED SAND MOUNDS.
3. WELL SORTED CLEAN AGGREGATE SHOULD BE USED, MAXIMUM DIAMETER – 6".
4. AGGREGATE SHOULD BE COMPLETELY SURROUNDED BY FILTER FABRIC AND PLACED LOOSE LIFT MAXIMUM THICKNESS OF 12 INCHES.
5. ONE FOOT OF SOIL COVER (LOAM OR SILT LOAM) SHOULD BE PLACED OVER TOP OF THE AGGREGATE, WITH FILTER FABRIC PLACED BETWEEN.
6. TO MINIMIZE THE POTENTIAL FOR GROUND WATER CONTAMINATION, ONLY INERT FIBERGLASS SHINGLES SHOULD BE USED AS ROOFING FOR THE RESIDENCE.
7. THE DRY WELL SHOULD BE DUG WITH A BACKHOE AND NO HEAVY CONSTRUCTION EQUIPMENT IS ALLOWED ON TOP OF THE SEEPAGE PIT DURING CONSTRUCTION.

DRYWELL DIMENSIONS
INFILTRATION RATE 8.0 IN/HR– FOUR (4) 5.12'l x 5.12'w x 2.75'd
INFILTRATION RATE 3.2 IN/HR– FOUR (4) 7.31'l x 7.31'w x 2.75'd
INFILTRATION RATE 1.8 IN/HR– FOUR (4) 8.75'l x 8.75'w x 2.75'd
INFILTRATION RATE 0.9 IN/HR– FOUR (4) 10.62'l x 10.62'w x 2.75'd
INFILTRATION RATE 0.5 IN/HR– FOUR (4) 11.5'l x 11.5'w x 2.75'd

## TYPICAL DRYWELL DETAIL
NTS

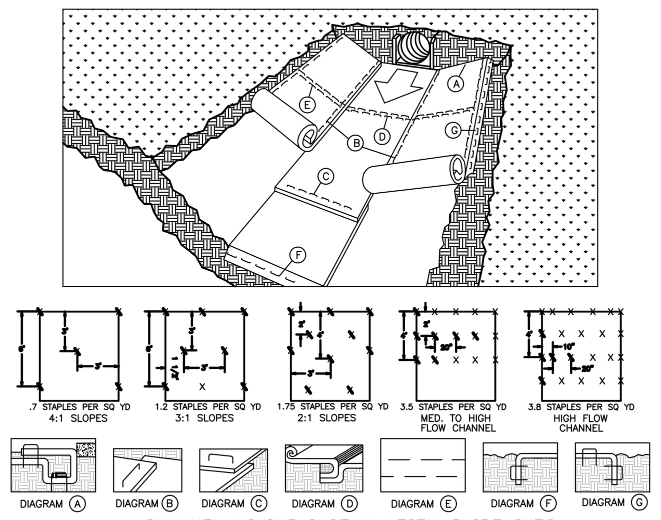


*OTHER NETTING, MANUFACTURERS, AND/OR INSTALLER MAY BE USED WITH SAME SPECIFICATIONS AS SHOWN ON PLAN
*BRINKASH & ASSOCIATES DOES NOT ENDORSE ANY PRODUCTS AND/OR MANUFACTURES OF MATERIALS NEEDED TO CONSTRUCT ANY BMPS INCLUDED WITHIN THIS PLAN. PRODUCTS INCLUDED ON THIS PLAN SERVE AS GUIDELINES/EXAMPLES FOR CONTRACTOR

## CHANNEL LINING INSTALLATION GUIDELINES

These guidelines are recommendations only. Any questions about the installation should be confirmed with your local distributor.

1. Prepare the soil surface including raking, seeding, and fertilizing.
2. Begin the installation process by digging a trench 6" deep by 6" wide at the up-slope portion of the channel. Position the first blanket along the center of the channel. Place 12" of blanket over the up-slope portion of the trench. Secure the blanket at the bottom of the trench with staples placed 12" apart. Backfill and compact the trench. Apply seed and fold the remaining 12" of blanket over soil and secure with a row of staples placed 12" apart across the width of the blanket. (See Diagram A)
3. Continue placing blankets up the slopes on both sides with a minimum 4" overlapping and securing each blanket in the beginning trench. Staples should be placed in a staggered pattern at approximately 12" intervals. Refer to above staple patterns.
4. Additional horizontal blankets can be joined using a minimum 4" overlapping or shingle style in the direction of water flow. Connect the blankets by placing staples approximately 5" apart across the width of the blankets. (See Diagram E)
5. For maximum performance a check slot should be placed at 25'-40' intervals. A 6" deep by 6" wide trench is made. Blanket is placed at bottom of trench and covered with approximately 2" of soil. The blanket is rolled over compacted soil and secured with staples placed 4" apart. A second row should be placed 4" below in a staggered pattern. Backfill and compact the trench. Apply seed and continue with general installation. (See Diagrams D & E)
6. The end of blanket must be secured in a 6" x 6" trench with a row of staples placed at 12" intervals. (See Diagram F)
7. At the top edge of the side slope, fasten the blanket in a 6" by 6" trench with staples placed at 12" intervals. Install an additional row of staples 12" down slope of the trench along the width of the fabric. (See Diagram G)

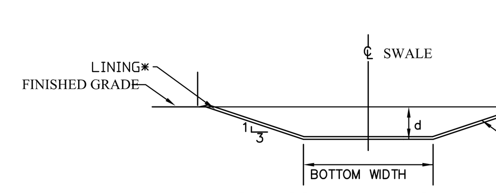


## GRASS LINED SWALE
NTS

* See Manufacturer's Lining Installation Detail for Staple Patterns, and Vegetation Stabilization Specifications for Soil Amendments, Seed Mixtures, and Mulching information.

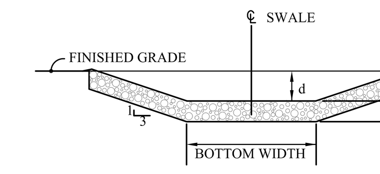


## RIP-RAP LINED SWALE
NTS

| RIPRAP | D50 STONE SIZE (INCHES) | PLACEMENT THICKNESS (T) (INCHES) |
|---|---|---|
| R-3 | 3 | 9 |
| R-4 | 6 | 18 |
| R-5 | 9 | 27 |
| R-6 | 12 | 36 |
| R-7 | 15 | 45 |

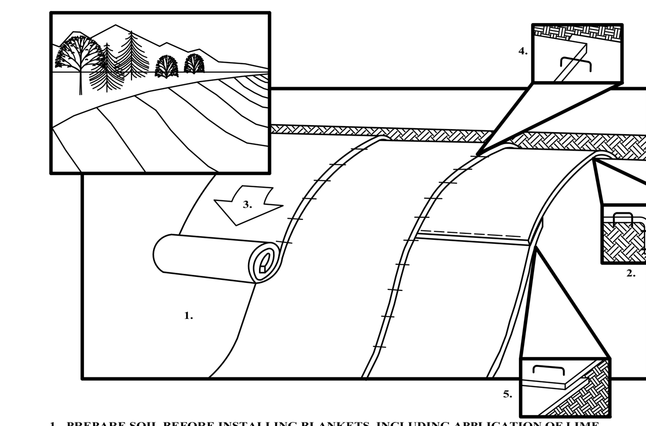

1. PREPARE SOIL BEFORE INSTALLING BLANKETS, INCLUDING APPLICATION OF LIME, FERTILIZER AND SEED.
2. BEGIN AT THE TOP OF THE SLOPE BY ANCHORING THE BLANKET IN A 6" DEEP BY 6" WIDE TRENCH. BACKFILL AND COMPACT THE TRENCH AFTER STAPLING.
3. ROLL THE BLANKETS DOWN THE SLOPE IN THE DIRECTION OF THE WATER FLOW.
4. THE EDGES OF PARALLEL BLANKETS MUST BE STAPLED WITH APPROX. 2" OVERLAP.
5. WHEN BLANKETS MUST BE SPLICED DOWN THE SLOPE, PLACE BLANKETS END OVER END (SHINGLE STYLE) WITH APPROX. 6" OVERLAP. STAPLE THROUGH OVERLAPPED AREA. APPROX. 12" APART.

## EROSION CONTROL MATTING DETAIL
* USE REGULAR 'XCEL' OR EQUAL
NTS

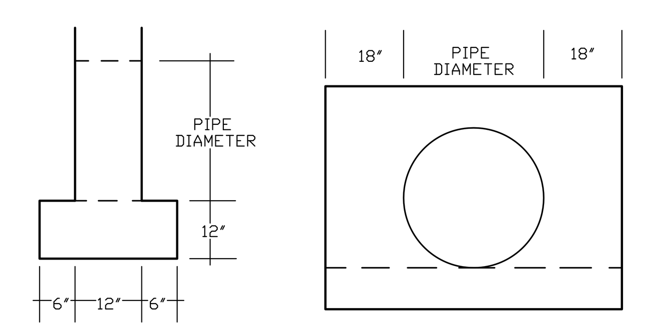


-4000 PSI CONCRETE @ 28 DAYS
-1" CHAMFER ON EXPOSED EDGES

## CONCRETE HEADWALL
NTS

---

SYMBOL

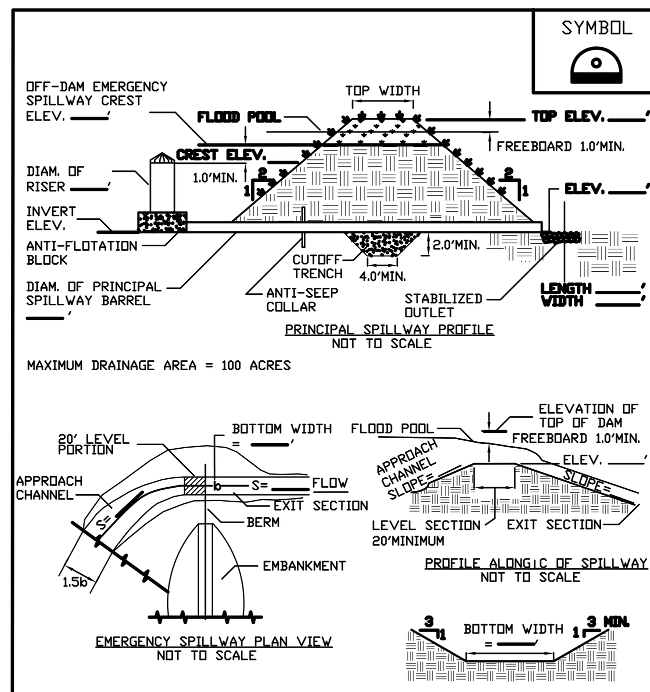


U.S. DEPARTMENT OF AGRICULTURE / NATURAL RESOURCES CONSERVATION SERVICE / NEW YORK STATE DEPARTMENT OF ENVIRONMENTAL CONSERVATION / NEW YORK STATE SOIL & WATER CONSERVATION COMMITTEE — **SEDIMENT BASIN DETAILS**

SYMBOL

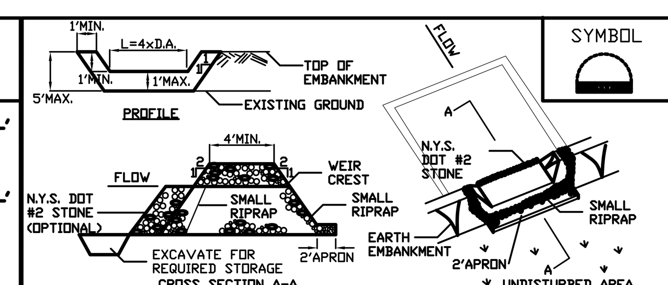


OPTION: A ONE FOOT LAYER OF N.Y.S. DOT #2 STONE MAY BE PLACED ON THE UPSTREAM SIDE OF THE RIPRAP INPLACE OF THE EMBEDDED FILTER CLOTH.

### CONSTRUCTION SPECIFICATIONS

1. AREA UNDER EMBANKMENT SHALL BE CLEARED, GRUBBED AND STRIPPED OF ANY VEGETATION AND ROOT MAT. THE POOL AREA SHALL BE CLEARED.
2. THE FILL MATERIAL FOR THE EMBANKMENT SHALL BE FREE OF ROOTS AND OTHER WOODY VEGETATION AS WELL AS OVER-SIZED STONES, ROCKS, ORGANIC MATERIAL OR OTHER OBJECTIONABLE MATERIAL. THE EMBANKMENT SHALL BE COMPACTED BY TRAVERSING WITH EQUIPMENT WHILE IT IS BEING CONSTRUCTED.
3. ALL CUT AND FILL SLOPES SHALL BE 2:1 OR FLATTER.
4. THE STONE USED IN THE OUTLET SHALL BE SMALL RIPRAP 4"-8" ALONG WITH A 1' THICKNESS OF 2" AGGREGATE PLACED ON THE UP-GRADE SIDE ON THE SMALL RIPRAP OR EMBEDDED FILTER CLOTH IN THE RIPRAP.
5. SEDIMENT SHALL BE REMOVED AND TRAP RESTORED TO ITS ORIGINAL DIMENSIONS WHEN THE SEDIMENT HAS ACCUMULATED TO 1/2 THE DESIGN DEPTH OF THE TRAP.
6. THE STRUCTURE SHALL BE INSPECTED AFTER EACH RAIN AND REPAIRS MADE AS NEEDED.
7. CONSTRUCTION OPERATIONS SHALL BE CARRIED OUT IN SUCH A MANNER THAT EROSION AND WATER POLLUTION IS MINIMIZED.
8. THE STRUCTURE SHALL BE REMOVED AND THE AREA STABILIZED WHEN THE DRAINAGE AREA HAS BEEN PROPERLY STABILIZED.

MAXIMUM DRAINAGE AREA 5 ACRES

U.S. DEPARTMENT OF AGRICULTURE / NATURAL RESOURCES CONSERVATION SERVICE / NEW YORK STATE DEPARTMENT OF ENVIRONMENTAL CONSERVATION / NEW YORK STATE SOIL & WATER CONSERVATION COMMITTEE — **STONE OUTLET SEDIMENT TRAP ST-IV**

SYMBOL

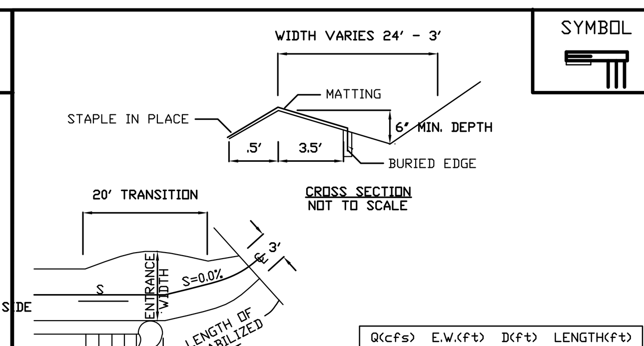


| Q(cfs) | E.W.(ft) | D(ft) | LENGTH(ft) |
|---|---|---|---|
| 0-10 | 10 | 0.5 | 10 |
| 10-20 | 16 | 0.6 | 20 |
| 20-30 | 24 | 0.7 | 30 |

### CONSTRUCTION SPECIFICATIONS

1. THE MATTING SHOULD BE A MINIMUM OF 4FT. WIDE EXTENDING 6 INCHES OVER THE LIP AND BURIED 6 INCHES DEEP IN A VERTICAL TRENCH ON THE LOWER EDGE. THE UPPER EDGE SHOULD BUTT AGAINST SMOOTHLY CUT SOD AND BE SECURELY HELD IN PLACE WITH CLOSELY SPACED HEAVY DUTY WIRE STAPLES AT LEAST 12 INCHES IN LENGTH.
2. ENSURE THAT THE LIP IS LEVEL TO UNIFORMLY SPREAD DISCHARGE.
3. THE LIP SHALL BE CONSTRUCTED ON UNDISTURBED SOIL NOT FILL.
4. A 20 FOOT TRANSITION SECTION WILL BE CONSTRUCTED FROM THE DIVERSION CHANNEL TO THE SPREADER TO SMOOTHLY BLEND THE DIFFERENT DIMENSION AND GRADES.
5. THE RUNOFF DISCHARGE WILL BE OUTLETED ONTO A STABILIZED VEGETATED SLOPE NOT EXCEEDING 10%.
6. SEED AND MULCH THE DISTURBED AREA IMMEDIATELY AFTER CONSTRUCTION.

U.S. DEPARTMENT OF AGRICULTURE / NATURAL RESOURCES CONSERVATION SERVICE / NEW YORK STATE DEPARTMENT OF ENVIRONMENTAL CONSERVATION / NEW YORK STATE SOIL & WATER CONSERVATION COMMITTEE — **LEVEL SPREADER**

SYMBOL A-2 / B-3

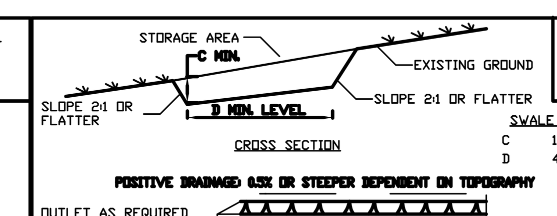


### CONSTRUCTION SPECIFICATIONS

1. ALL TEMPORARY SWALES SHALL HAVE UNINTERUPTED POSITIVE GRADE TO AN OUTLET.
2. DIVERTED RUNOFF FROM A DISTURBED AREA SHALL BE CONVEYED TO A SEDIMENT TRAPPING DEVICE.
3. DIVERTED RUNOFF FROM AN UNDISTURBED AREA SHALL OUTLET DIRECTLY INTO AN UNDISTURBED STABILIZED AREA AT NON-EROSIVE VELOCITY.
4. ALL TREES, BRUSH, STUMPS, OBSTRUCTIONS, AND OTHER OBJECTIONABLE MATERIAL SHALL BE REMOVED AND DISPOSED OF SO AS NOT TO INTERFERE WITH THE PROPER FUNCTIONING OF THE SWALE.
5. THE SWALE SHALL BE EXCAVATED OR SHAPED TO LINE, GRADE, AND CROSS SECTION AS REQUIRED TO MEET THE CRITERIA SPECIFIED HEREIN AND BE FREE OF BANK PROJECTIONS OR OTHER IRREGULARITIES WHICH WILL IMPEDE NORMAL FLOW.
6. FILLS SHALL BE COMPACTED BY EARTH MOVING EQUIPMENT.
7. ALL EARTH REMOVED AND NOT NEEDED FOR CONSTRUCTION SHALL BE PLACED SO THAT IT WILL NOT INTERFERE WITH THE FUNCTIONING OF THE SWALE.
8. STABILIZATION SHALL BE AS PER THE FLOW CHANNEL STABILIZATION CHART BELOW:

| TYPE OF TREATMENT | CHANNEL GRADE | A(5 AC. OR LESS) | B(5 AC -10AC) |
|---|---|---|---|
| 1 | 0.5-3.0% | SEED AND STRAW MULCH | SEED AND STRAW MULCH |
| 2 | 3.1-5.0% | SEED AND STRAW MULCH | SEED USING JUTE OR EXCELSIOR |
| 3 | 5.1-8.0% | SEED WITH JUTE OR EXCELSIOR, SOD | LINED WITH 4-8" RIP-RAP OR RECYCLED CONCRETE EQUIVALENT |
| 4 | 8.1-20% | LINED WITH 4-8" RIP-RAP | ENGINEERED DESIGN |

9. PERIODIC INSPECTION AND REQUIRED MAINTENANCE MUST BE PROVIDED AFTER EACH RAIN EVENT.

U.S. DEPARTMENT OF AGRICULTURE / NATURAL RESOURCES CONSERVATION SERVICE / NEW YORK STATE DEPARTMENT OF ENVIRONMENTAL CONSERVATION / NEW YORK STATE SOIL & WATER CONSERVATION COMMITTEE — **TEMPORARY SWALE**

SYMBOL —WB—

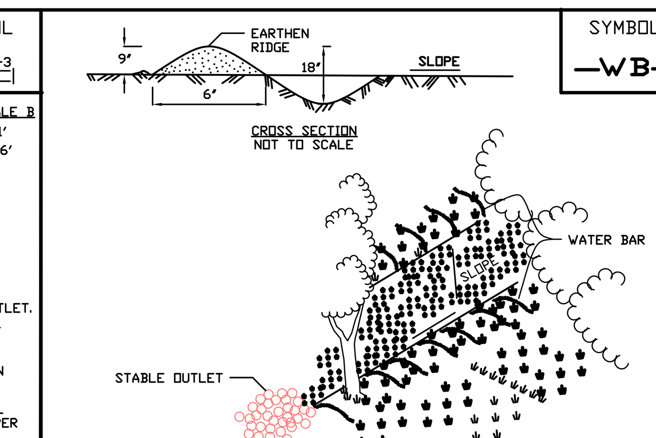


### CONSTRUCTION SPECIFICATIONS

1. INSTALL THE WATER BAR AS SOON AS THE RIGHT OF WAY IS CLEARED AND GRADED.
2. DISK OR STRIP THE SOD FROM THE BASE FOR THE CONSTRUCTED RIDGE BEFORE PLACING FILL.
3. TRACK THE RIDGE TO COMPACT IT TO THE DESIGN CROSS SECTION.
4. THE OUTLET SHALL BE LOCATED ON AN UNDISTURBED AREA. FIELD SPACING WILL BE ADJUSTED TO USE THE MOST STABLE OUTLET AREAS. OUTLET PROTECTION WILL BE PROVIDED WHEN NATURAL AREAS ARE NOT ADEQUATE.
5. VEHICLE CROSSING SHALL BE STABILIZED WITH GRAVEL. EXPOSED AREAS SHALL BE IMMEDIATELY SEEDED AND MULCHED.
6. PERIODICALLY INSPECT WATER BARS FOR EROSION DAMAGE AND SEDIMENT. CHECK OUTLET AREAS AND MAKE REPAIRS AS NEEDED TO RESTORE OPERATION.

U.S. DEPARTMENT OF AGRICULTURE / NATURAL RESOURCES CONSERVATION SERVICE / NEW YORK STATE DEPARTMENT OF ENVIRONMENTAL CONSERVATION / NEW YORK STATE SOIL & WATER CONSERVATION COMMITTEE — **WATER BARS**

SYMBOL

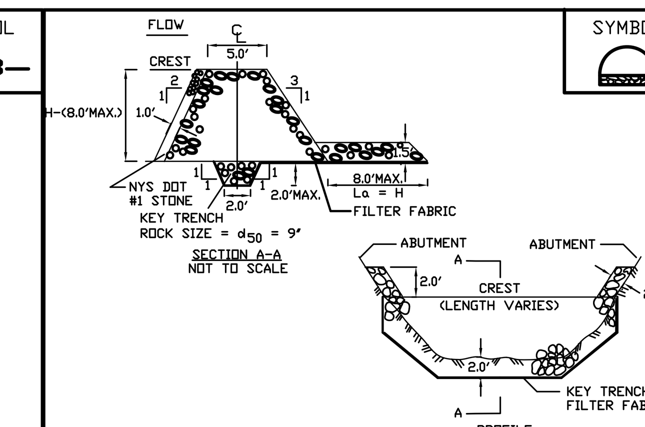


### CONSTRUCTION SPECIFICATIONS

1. THE AREA UNDER THE ROCK DAM SHALL BE CLEARED AND STRIPPED OF ROOTS AND OTHER OBJECTIONABLE MATERIAL. THE RESERVOIR SHALL BE CLEARED AS NEEDED TO FACILITATE SEDIMENT REMOVAL.
2. DIMENSIONS SHOWN ARE MINIMUM. TRENCH SHALL BE EXCAVATED FROM ABUTMENT TO ABUTMENT ON THE DAM CENTERLINE. FILTER FABRIC SHALL BE PLACED FROM UPSTREAM EDGE OF KEYTRENCH TO DOWNSTREAM EDGE OF APRON. JOINTS WILL LAP A MINIMUM OF 1 FT. WITH UPSTREAM STRIP ON TOP.
3. CONSTRUCT THE ROCK EMBANKMENT TO THE DIMENSIONS SHOWN ON THE DRAWING. ROCK ABUTMENTS SHALL BE MAINTAINED 2 FT. ABOVE THE CREST.
4. THE ROCK DAM SHALL BE CONSTRUCTED PRIOR TO CLEARING THE BASIN AREA. STABILIZE ALL DISTURBED AREAS, EXCEPT THE BASIN AREA, WITH TEMPORARY SEEDING.
5. FENCES AND WARNING SIGNS SHOULD BE PLACED AS APPROPRIATE.

MAXIMUM DRAINAGE AREA: 50 ACRES

U.S. DEPARTMENT OF AGRICULTURE / NATURAL RESOURCES CONSERVATION SERVICE / NEW YORK STATE DEPARTMENT OF ENVIRONMENTAL CONSERVATION / NEW YORK STATE SOIL & WATER CONSERVATION COMMITTEE — **ROCK DAM**

SYMBOL

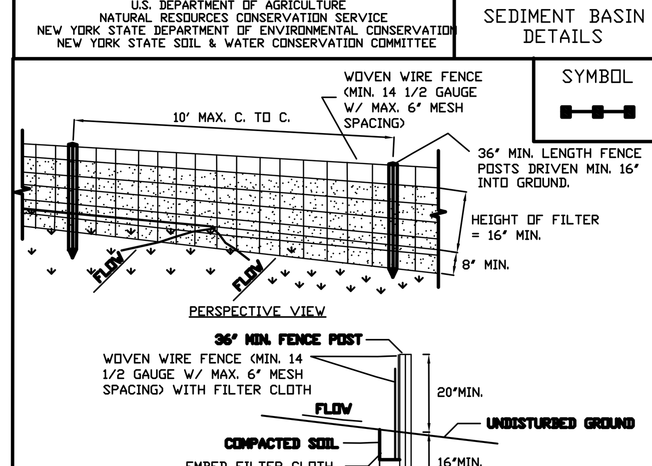


### CONSTRUCTION SPECIFICATIONS

1. WOVEN WIRE FENCE TO BE FASTENED SECURELY TO FENCE POSTS WITH WIRE TIES OR STAPLES. POSTS SHALL BE STEEL EITHER "T" OR "U" TYPE OR HARDWOOD.
2. FILTER CLOTH TO BE TO BE FASTENED SECURELY TO WOVEN WIRE FENCE WITH TIES SPACED EVERY 24" AT TOP AND MID SECTION. FENCE SHALL BE WOVEN WIRE, 12 1/2 GAUGE, 6" MAXIMUM MESH OPENING.
3. WHEN TWO SECTIONS OF FILTER CLOTH ADJOIN EACH OTHER THEY SHALL BE OVER-LAPPED BY SIX INCHES AND FOLDED. FILTER CLOTH SHALL BE EITHER FILTER X, MIRAFI 100X, STABILINKA T140N, OR APPROVED EQUIVALENT.
4. PREFABRICATED UNITS SHALL BE GEOFAB, ENVIROFENCE, OR APPROVED EQUIVALENT.
5. MAINTENANCE SHALL BE PERFORMED AS NEEDED AND MATERIAL REMOVED WHEN "BULGES" DEVELOP IN THE SILT FENCE.

U.S. DEPARTMENT OF AGRICULTURE / NATURAL RESOURCES CONSERVATION SERVICE / NEW YORK STATE DEPARTMENT OF ENVIRONMENTAL CONSERVATION / NEW YORK STATE SOIL & WATER CONSERVATION COMMITTEE — **SILT FENCE**

SYMBOL

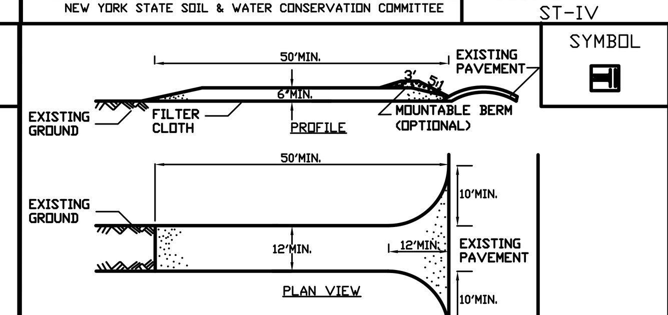


### CONSTRUCTION SPECIFICATIONS

1. STONE SIZE – USE 2" STONE, OR RECLAIMED OR RECYCLED CONCRETE EQUIVALENT.
2. LENGTH – NOT LESS THAN 50 FEET (EXCEPT ON A SINGLE RESIDENCE LOT WHERE A 30 FOOT MINIMUM LENGTH WOULD APPLY).
3. THICKNESS – NOT LESS THAN SIX (6) INCHES.
4. WIDTH – TWELVE (12) FOOT MINIMUM, BUT NOT LESS THAN THE FULL WIDTH AT POINTS WHERE INGRESS OR EGRESS OCCURS. TWENTY-FOUR (24) FOOT IF SINGLE ENTRANCE TO SITE.
5. FILTER CLOTH – WILL BE PLACED OVER THE ENTIRE AREA PRIOR TO PLACING OF STONE.
6. SURFACE WATER – ALL SURFACE WATER FLOWING OR DIVERTED TOWARD CONSTRUCTION ENTRANCES SHALL BE PIPED ACROSS THE ENTRANCE. IF PIPING IS IMPRACTICAL, A MOUNTABLE BERM WITH 5:1 SLOPES WILL BE PERMITTED.
7. MAINTENANCE – THE ENTRANCE SHALL BE MAINTAINED IN A CONDITION WHICH WILL PREVENT TRACKING OR FLOWING OF SEDIMENT ONTO PUBLIC RIGHTS-OF-WAY. ALL SEDIMENT SPILLED, DROPPED, WASHED OR TRACTED ONTO PUBLIC RIGHTS-OF-WAY MUST BE REMOVED IMMEDIATELY.
8. WHEN WASHING IS REQUIRED, IT SHALL BE DONE ON A AREA STABILIZED WITH STONE AND WHICH DRAINS INTO AN APPROVED SEDIMENT TRAPPING DEVICE.
9. PERIODIC INSPECTION AND NEEDED MAINTENANCE SHALL BE PROVIDED AFTER EACH RAIN.

U.S. DEPARTMENT OF AGRICULTURE / NATURAL RESOURCES CONSERVATION SERVICE / NEW YORK STATE DEPARTMENT OF ENVIRONMENTAL CONSERVATION / NEW YORK STATE SOIL & WATER CONSERVATION COMMITTEE — **STABILIZED CONSTRUCTION ENTRANCE**

### TYPICAL ANTI SEEP COLLARS
NOT TO SCALE

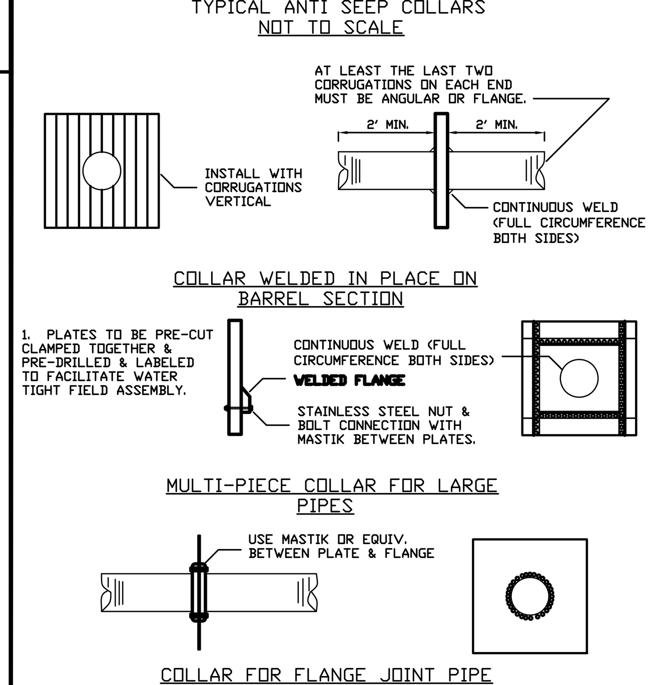


U.S. DEPARTMENT OF AGRICULTURE / NATURAL RESOURCES CONSERVATION SERVICE / NEW YORK STATE DEPARTMENT OF ENVIRONMENTAL CONSERVATION / NEW YORK STATE SOIL & WATER CONSERVATION COMMITTEE — **ANTI SEEP COLLAR**

SYMBOL (FR)

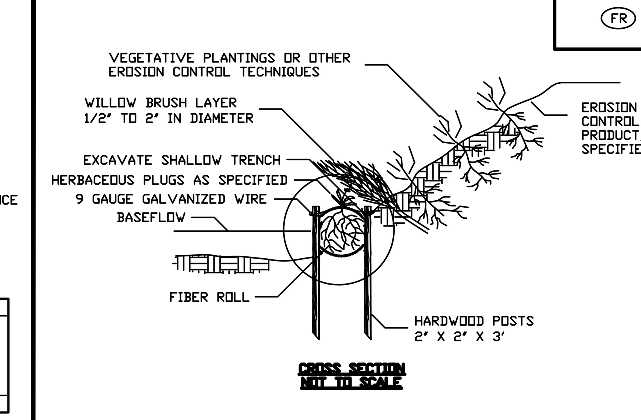


### CONSTRUCTION SPECIFICATIONS

1. EXCAVATE A SHALLOW TRENCH AT THE TOE OF SLOPE TO SLIGHTLY BELOW BASEFLOW.
2. PLACE THE ROLL IN THE TRENCH AND ANCHOR WITH 2" x 2" POSTS PLACED ON BOTH SIDES OF THE ROLL AND SPACED LATERALLY ON 2' TO 4' CENTERS. TRIM THE TOP OF THE POSTS EVEN WITH THE EDGE OF THE ROLL, IF NECESSARY.
3. NOTCH THE POSTS AND TIE TOGETHER, ACROSS THE ROLL, WITH 9 GAUGE GALVANIZED WIRE OR 1/8" DIAMETER BRAIDED NYLON ROPE..
4. PLACE SOIL EXCAVATED FROM THE TRENCH BEHIND THE ROLL AND HAND TAMP. PLANT WITH SUITABLE HERBACEOUS OR WOODY VEGETATION AS SPECIFIED ELSEWHERE IN THE CONTRACT DOCUMENTS. VEGETATION SHALL BE PLACED IMMEDIATELY ADJACENT TO THE ROLL TO PROMOTE ROOT GROWTH INTO THE FIBER. HERBACEOUS VEGETATION, IF SPECIFIED, SHALL BE PLANTED INTO THE FIBER ROLL.

USDA – NATURAL RESOURCES CONSERVATION SERVICE / NEW YORK STATE DEPARTMENT OF TRANSPORTATION / NEW YORK STATE DEPARTMENT OF ENVIRONMENTAL CONSERVATION / NEW YORK STATE SOIL & WATER CONSERVATION COMMITTEE — **FIBER ROLL**

### CONSTRUCTION SPECIFICATIONS

1. ALL GRADED OR DISTURBED AREAS INC;UDING SLOPES SHALL BE PROTECTED DURING CLEARING AND CONSTRUCTION IN ACCORDANCE WITH THE APPROVED SEDIMENT CONTROL PLAN UNTIL THEY ARE PERMANENTLY STABILIZED.
2. ALL SEDIMENT CONTROL PRACTICES AND MEASURES SHALL BE CONSTRUCTED, APPLIED AND MAINTAINED IN ACCORDANCE WITH THE APPROVED SEDIMENT CONTROL PLAN AND THE "STANDARDS AND SPECIFICATIONS FOR SOIL EROSION AND SEDIMENT CONTROL IN DEVELOPING AREAS".
3. TOPSOIL REQUIRED FOR THE ESTABLISHMENT OF VEGETATION SHALL BE STOCKPILED IN AMOUNT NECESSARY TO COMPLETE FINISHED GRADING OF ALL EXPOSED AREAS.
4. AREAS TO BE FILLED SHALL BE CLEARED, GRUBBED, AND STRIPPED OF TOPSOIL TO REMOVE TREES, VEGETATION, ROOTS OR OTHER OBJECTIONABLE MATERIAL.
5. AREAS WHICH ARE TO BE TOPSOILED SHALL BE SCARIFIED TO A MINIMUM DEPTH OF FOUR INCHES PRIOR TO PLACEMENT OF TOPSOIL.
6. ALL FILLS SHALL BE COMPACTED AS REQUIRED TO REDUCE EROSION, SLIPPAGE, SETTLEMENT, SUBSIDENCE OR OTHER RELATED PROBLEMS. FILL INTENDED TO SUPPORT BUILDINGS, STRUCTURES AND CONDUITS, ETC. SHALL BE COMPACTED IN ACCORDANCE WITH LOCAL REQUIREMENTS OR CODES.
7. ALL FILL TO BE PLACED AND COMPACTED IN LAYERS NOT TO EXCEED 9 INCHES IN THICKNESS.
8. EXCEPT FOR APPROVED LANDFILLS, FILL MATERIAL SHALL BE FREE OF FROZEN PARTICLES, BRUSH, ROOTS, SOD, OR OTHER FOREIGN OR OTHER OBJECTIONABLE MATERIALS THAT WOULD INTERFERE WITH OR PREVENT CONSTRUCTION OF SATISFACTORY FILLS.
9. FROZEN MATERIALS OR SOFT, MUCKY OR HIGHLY COMPRESSIBLE MATERIALS SHALL NOT BE INCORPORATED IN FILLS.
10. FILL SHALL NOT BE PLACED ON SATURATED OR FROZEN SURFACES.
11. ALL BENCHES SHALL BE KEPT FREE OF SEDIMENT DURING ALL PHASES OF DEVELOPMENT.
12. SEEPS OR SPRINGS ENCOUNTERED DURING CONSTRUCTION SHALL BE HANDLED IN ACCORDANCE WITH THE STANDARD AND SPECIFICATION FOR SUBSURFACE DRAIN OR OTHER APPROVED METHOD.
13. ALL GRADED AREAS SHALL BE PERMANENTLY STABILIZED IMMEDIATELY FOLLOWING FINISHED GRADING.
14. STOCKPILES, BORROW AREAS AND SPOIL AREAS SHALL BE SHOWN ON THE PLANS AND SHALL BE SUBJECT TO THE PROVISIONS OF THIS STANDARD AND SPECIFICATION.

U.S. DEPARTMENT OF AGRICULTURE / NATURAL RESOURCES CONSERVATION SERVICE / NEW YORK STATE DEPARTMENT OF ENVIRONMENTAL CONSERVATION / NEW YORK STATE SOIL & WATER CONSERVATION COMMITTEE — **LANDGRADING SPECIFICATIONS**

SYMBOL

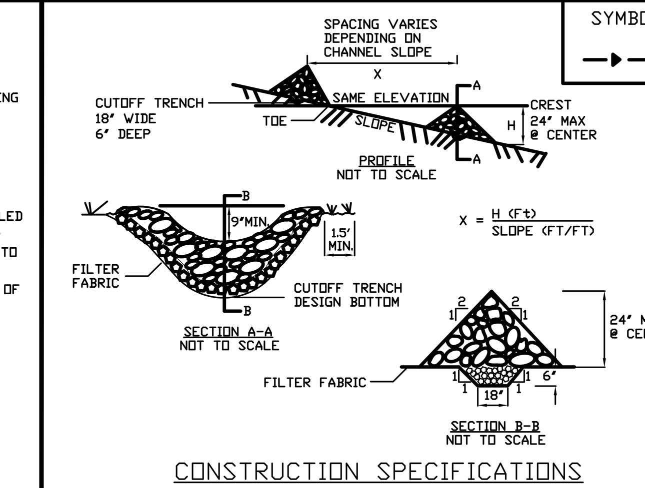


### CONSTRUCTION SPECIFICATIONS

1. STONE WILL BE PLACED ON A FILTER FABRIC FOUNDATION TO THE LINES, GRADES AND LOCATIONS SHOWN IN THE PLAN.
2. SET SPACING OF CHECK DAMS TO ASSUME THAT THE ELEVATIONS OF THE CREST OF THE DOWNSTREAM DAM IS AT THE SAME ELEVATION OF THE TOE OF THE UPSTREAM DAM.
3. EXTEND THE STONE A MINIMUM OF 1.5 FEET BEYOND THE DITCH BANKS TO PREVENT CUTTING AROUND THE DAM.
4. PROTECT THE CHANNEL DOWNSTREAM OF THE LOWEST CHECK DAM FROM SCOUR AND EROSION WITH STONE OR LINER AS APPROPRIATE.
5. ENSURE THAT CHANNEL APPURTENANCES SUCH AS CULVERT ENTRANCES BELOW CHECK DAMS ARE NOT SUBJECT TO DAMAGE OR BLOCKAGE FROM DISPLACED STONE.

MAXIMUM DRAINAGE AREA 2 ACRES.

U.S. DEPARTMENT OF AGRICULTURE / NATURAL RESOURCES CONSERVATION SERVICE / NEW YORK STATE DEPARTMENT OF ENVIRONMENTAL CONSERVATION / NEW YORK STATE SOIL & WATER CONSERVATION COMMITTEE — **CHECK DAM**

---

PROJECT NO. 2065-8-09

DATE: 1/7/10 | BY: M.P.B. | DESIGNED BY: M.P.B.
SURVEY FILE: | DWG. FILE:

| NO. | DESCRIPTION OF REVISION | DATE |
|---|---|---|
| 4 | REV. PER 7/1/10 & 1/12/11 REVIEWS | 1/13/11 |
| 3 | REVISIONS PER 3/9/10 CT MALE REVIEW | 4/12/10 |
| 2 | REVISIONS PER 11/2/09 CT MALE REVIEW | 1/7/10 |
| 1 | REVISE PER 3/9/10 CT MALE COMMENTS | 4/12/10 |


Lost Lake Resort, Inc.
10100 North Central Expressway
Suite 600
Dallas, TX 75231

TIM MILLER ASSOCIATES, INC.
Planning, Environmental and Development Advisory Services
10 North Street, Cold Spring, NY 10516 (914) 265-4400

BRINKASH ASSOCIATES, INC.
(A PENNSYLVANIA CORPORATION)
SURVEYING & ENGINEERING
1713 CENTRE STREET ASHLAND, PA 17921
(570)-875-1018 (PHONE) (570)-875-1670 (FAX)


PRELIMINARY DESIGN PLANS

Lost Lake RESORT

TOWN OF FORESTBURGH, SULLIVAN COUNTY, NY

CONSTRUCTION DETAILS-1

SHEET C-34